safe-t

SAFE-T QC ROTARY STEERING

APPLICATIONS

Virtually all power-assisted sterndrive boats with wheels up to 16” diameter. Safe-T QC® replaces all SeaStar Solutions Safe-T helms made since 1968 with little or no dash modifications. (Requires use of SSC62 QC or SSC61 QC II steering cable.)

For single station use only. Safe-T QC accepts wheels up to 16” diameter.

Components are available for dual cable systems, but we recommend No-FeedBack steering for all dual cable steered, non-power-assisted outboards and sterndrives. See the NFB 4.2 Dual

FEATURES

- Quick-response of 3 turns lock-to-lock
- Kits include: cable, helm, 90° bezel and hardware
- Standard 3/4” round tapered steering shaft
- Stainless steel cable output ends
- Meets A.B.Y.C. standards
- Meets N.M.M.A. certification requirements

NFB™ Safe-T QC Single Cable System
(Steering Wheel not included.)

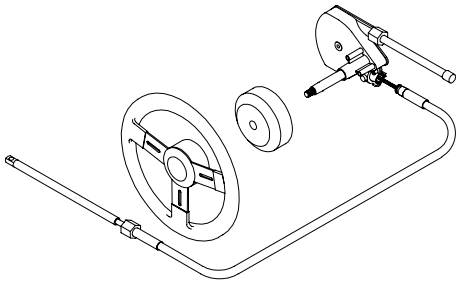

Traditional SeaStar Solutions mechanical steering is still the choice for sterndrives, inboards and other power assisted applications.

It’s just right for power steered boats in which No FeedBack™ systems are not required.

Safe-T® QC offers the quick response of three-turn steering, and easy installation with a patented, no-tools-required cable connection at the helm.

ORDER INFORMATION

COMPLETE SYSTEM	PART NO.
Safe-T QC Steering Kit (single cable) (Kits available in lengths of 8 - 23 ft)	SS137XX
COMPONENTS	
Safe-T QC Single Helm	SH5094P
QC Cable	SSC62XX
Safe-T QC Bezel (90°)	SB27484P
OPTIONS	
Safe-T QC Sgl. Tilt Dash Module (Each Kit Includes Tilt Helm & Tilt Mechanism)	SHT91523
Sport Tilt Mechanism	SH91800P
Sport Plus Tilt Mechanism	SH91900P
Safe-T QC Single Tilt Helm	SH91523P*
Safe-T QC Bezel (20°)	SB27483P
Cable Gard (fits most tilt tubes)	SA39329P

Issue Date - Sept 2013
Issue Number - ms10

SAFE-T QC ROTARY STEERING

FEATURES

- Fast, easy installation: uses simple snap-in cable connection, SeaStar Solutions Quick Connect (QC) cable, and industry-standard Safe-T mounting hardware

ORDER INFORMATION

SERVICE ITEMS	PART NO.
QC II Cable (For most Teleflex rotary helms) Includes SA27620P Helm Converter	SSC61XX
QC II Threaded Helm Converter (in SSC61 cable)	SA27620P
Steering Wheel Hardware Kit (Old Par No. 2745417P)	SA27454P
Spent Travel Tube	SA35680P
Hitch Pin for Quick Connect Helms (Old Par No. 2724514P)	SA27245P
Safe-T “TS” Helm (Old Style)	SH5023P
Safe-T QC Dual Helm	SH5294P†
Safe-T QC Dual Tilt Helm	SH91524P*†

XX = Lenth in feet

** Requires tilt mechanism to complete Tilt Steering system installation.*

† For dual cable. If steering is NOT power-assisted, upgrading to NFB 4.2 Dual Cable is recommended.

DISCLAIMER: This system is only recommended as replacement for the original system as installed by the boat manufacturer. Teleflex always recommends NFB helms for outboard applications. NFB helms lock out steering loads caused by propeller torque eliminating the driver fatigue normally experienced with a standard helm. Patented Teleflex steering helms are a drop in replacement for Safe-T systems.

TECHNICAL DATA

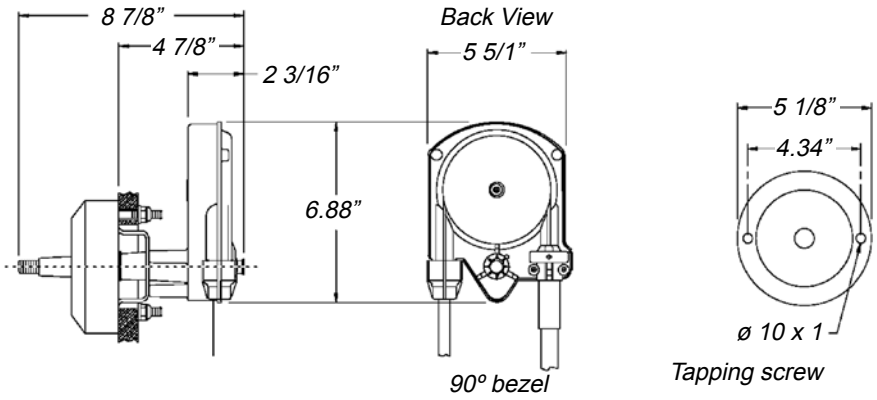

Issue Date - Sept 2013
Issue Number - ms10

safe-t

BIG-T® ROTARY STEERING (Single Station)

HOW TO MEASURE DUAL STATION CABLES

For a Big-T dual station steering system, the cable required is SSC81AxxBxx, where xx = the lengths of the two cable sections in feet. The letter “A” in the part number represents the cable routing path distance between steering stations. The letter “B” represents the cable routing path distance from the lower station to the engine/rudder area.

The different cable lengths are available in one-foot increments only.

EXAMPLE: if the cable routing from engine to lower station is 18 feet and 10 feet from station to station, order part number SSC81A10B18 cable.

NOTE:

Please be sure of your measurements because this cable is special order non-returnable.

Cable Measurment: Dual Station

Path “A”:
Center line of upper station wheel to center line of lower station wheel

Path “B”:
Center line of lower station wheel to cable connection at centered tiller.
Centerline of boator
Centered tiller

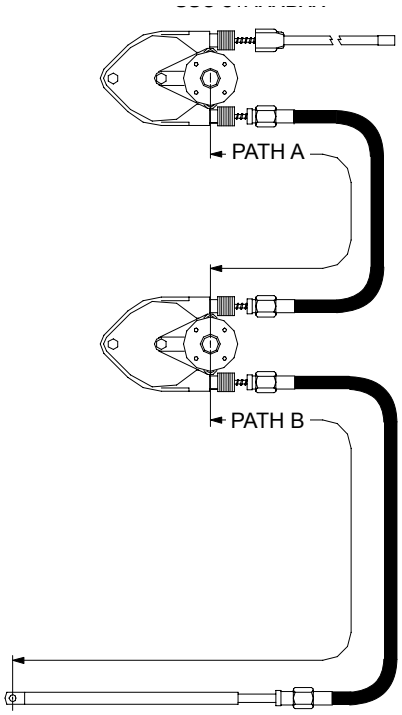

Issue Date - Sept 2013
Issue Number - ms1